# EZ-80 Single Board Computer Schematic

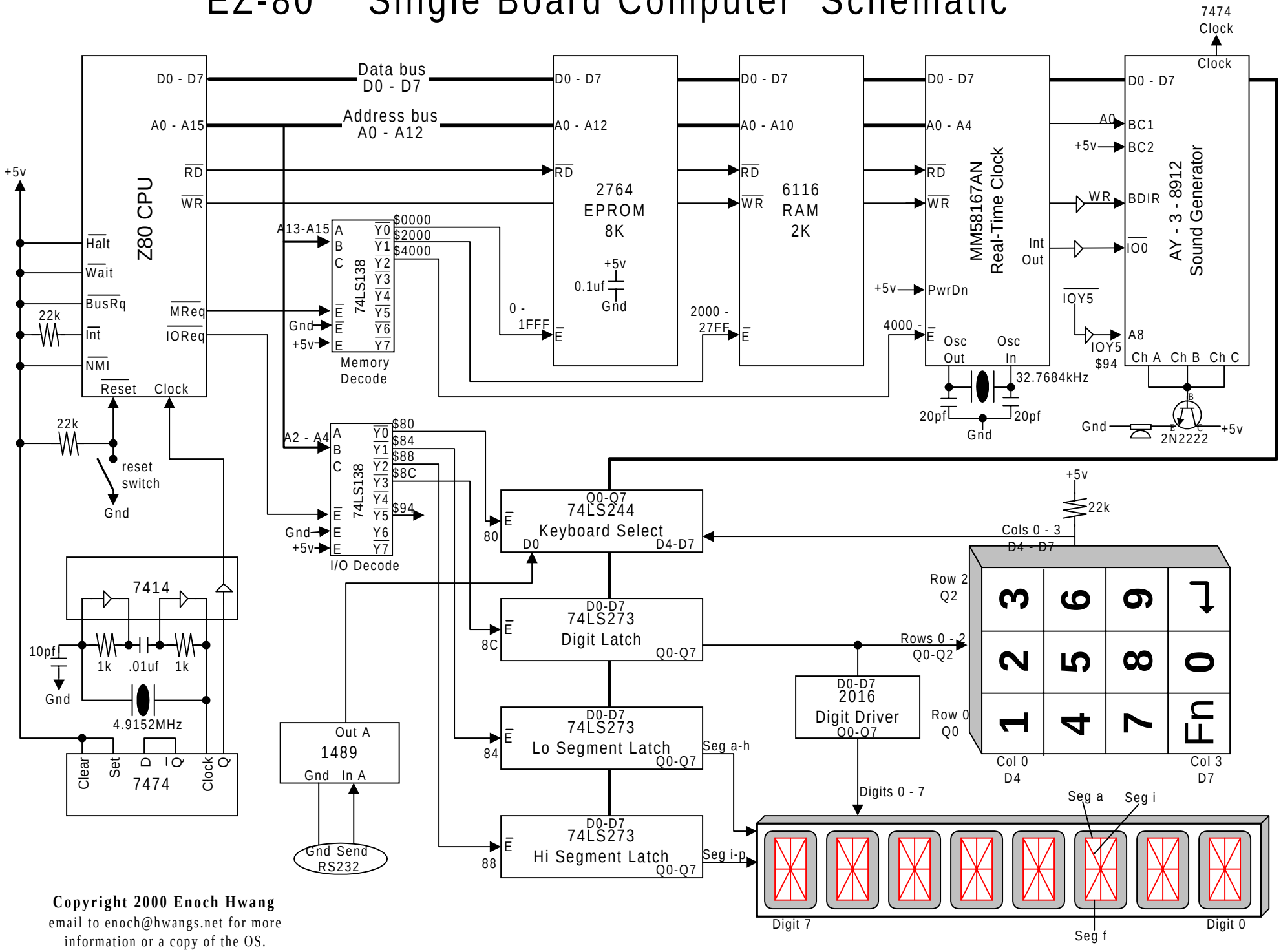


**Copyright 2000 Enoch Hwang**

email to enoch@hwangs.net for more information or a copy of the OS.